Ship sept 29th

Work Order ID 73906

Monday, September 19, 2011 8:12:13 AM

Item ID: D3913-041 **Accept** **Setup Start**

Revision ID:

Item Name: Long Basket Base Assemby, 350 **Stop**

Start Date: 9/19/2011 **Start Qty:** 1.00 **Cust Item ID:**

Required Date: 9/28/2011 **Req'd Qty:** 1.00 **Customer:**

Reference:

Approvals: **Process Plan:** MF **Date:** 11-09-19 **Tooling:** **Date:** **Run Start**

QC: **Date:** **SPC (Y/N):** **Date:** **Stop**

Sequence ID/ Work Center ID	Operation Description	Set Up/ Run Hours	Tool ID	Tool #	Plan Code	Accept Qty	Reject Qty	Reject Number	Insp. Stamp
Draw Nbr	**Revision Nbr**								
D3913	A								
D4020	A								
100	Weld per dwg A/R S.S. rod Batch# 114649	0.00				PMF	11/09/22		
Large Fab	Large Fab								
Large Fab	**Memo**	0.00							
	1- assemble ribs , weld as per dwg D3913 using DT9610A ***inspect before welding mesh*** 2-Cut D4020-1 base mesh and tack weld all mesh on basket as per dwg D3913 and trim mesh to fit if necessary and trim to clear fasteners holes on the ends 3- weld hinge (3) and Mounting brackets as per dwg D3913 ***take lid to locate hinge and bracket***								
110	QC9- Inspect visual per QSI004- Fusion Welds	0.00							
QC	**Memo**	0.00					11-05-22		
Quality Control									

Dart Aerospace Ltd

W/O:		WORK ORDER CHANGES					
DATE	STEP	PROCEDURE CHANGE	By	Date	Qty	Approval Chief Eng / Prod Mgr	Approval QC Inspector

Part No: _____ **PAR #:** _____ **Fault Category:** _____ **NCR:** Yes No **DQA:** _____ **Date:** _____

Resolution: _____ **Disposition:** _____ **QA: N/C Closed:** _____ **Date:** _____

NCR:		WORK ORDER NON-CONFORMANCE (NCR)						
DATE	STEP	Description of NC Section A	Corrective Action Section B			Verification Section C	Approval Chief Eng	Approval QC Inspector
			Initial Chief Eng	Action Description Chief Eng	Sign & Date			

NOTE: Date & initial all entries

H:\fFORMS\Quality Assurance\approved QA\NCRWO RevE

Work Order ID 73906

Monday, September 19, 2011 8:12:13 AM

Item ID: D3913-041 **Accept** **Setup Start**

Revision ID: **Stop**

Item Name: Long Basket Base Assemby, 350

Start Date: 9/19/2011 **Start Qty:** 1.00 **Cust Item ID:**

Required Date: 9/28/2011 **Req'd Qty:** 1.00 **Customer:**

Reference:

Approvals: **Process Plan:** _____ **Date:** _____ **Tooling:** _____ **Date:** _____ **Run Start**

QC: _____ **Date:** _____ **SPC (Y/N):** _____ **Date:** _____ **Stop**

Sequence ID/ Work Center ID	Operation Description	Set Up/ Run Hours	Tool ID	Tool #	Plan Code	Accept Qty	Reject Qty	Reject Number	Insp. Stamp
120	QC6- Inspect dimensions to drawing	0.00							
QC	Memo	0.00							
Quality Control									
125	Pressure Wash per QSI005 4.3	0.00							
HandFinish	Memo	0.00							
Hand Finishing									

5 w/09/22

10

NO m 11/09/22

Dart Aerospace Ltd

W/O:		WORK ORDER CHANGES					
DATE	STEP	PROCEDURE CHANGE	By	Date	Qty	Approval Chief Eng / Prod Mgr	Approval QC Inspector

Part No: _____ **PAR #:** _____ **Fault Category:** _____ **NCR:** Yes No **DQA:** _____ **Date:** _____

Resolution: _____ **Disposition:** _____ **QA: N/C Closed:** _____ **Date:** _____

NCR:		WORK ORDER NON-CONFORMANCE (NCR)						
DATE	STEP	Description of NC Section A	Corrective Action Section B			Verification Section C	Approval Chief Eng	Approval QC Inspector
			Initial Chief Eng	Action Description Chief Eng	Sign & Date			

NOTE: Date & initial all entries

H:\fFORMS\Quality Assurance\approved QA\NCRWO RevE

Work Order ID 73906

Monday, September 19, 2011 8:12:13 AM

Item ID: D3913-041 **Accept** **Setup Start**

Revision ID:

Item Name: Long Basket Base Assemby, 350 **Stop**

Start Date: 9/19/2011 **Start Qty:** 1.00 **Cust Item ID:**

Required Date: 9/28/2011 **Req'd Qty:** 1.00 **Customer:**

Reference:

Approvals: **Process Plan:** _____ **Date:** _____ **Tooling:** _____ **Date:** _____ **Run Start**

QC: _____ **Date:** _____ **SPC (Y/N):** _____ **Date:** _____ **Stop**

Sequence ID/ Work Center ID	Operation Description	Set Up/ Run Hours	Tool ID	Tool #	Plan Code	Accept Qty	Reject Qty	Reject Number	Insp. Stamp
130	White Gloss(Ref:4.3.5.2) per QSI005 4.3-Steel	0.00							
Powdercoat	**Memo**	0.00							
Powder Coating	1- Plug holes and mask only interior of hinge (3) prior to powder coat								
M 118439	1ST COAT: START TIME: 3:45 OVEN TEMPERATURE: 400°F FINISH TIME: 4:15 ********** 2nd coat if necessary ********** 2ND COAT: START TIME: _____ OVEN TEMPERATURE: _____ FINISH TIME: _____								
140	QC3- Inspect Part Finish	0.00							
QC	**Memo**	0.00							
Quality Control									

KO M-F 11/04/22

1 ϕ 11/04/23

Dart Aerospace Ltd

W/O:		WORK ORDER CHANGES					
DATE	STEP	PROCEDURE CHANGE	By	Date	Qty	Approval Chief Eng / Prod Mgr	Approval QC Inspector

Part No: _____ **PAR #:** _____ **Fault Category:** _____ **NCR:** Yes No **DQA:** _____ **Date:** _____

Resolution: _____ **Disposition:** _____ **QA: N/C Closed:** _____ **Date:** _____

NCR:		WORK ORDER NON-CONFORMANCE (NCR)						
DATE	STEP	Description of NC Section A	Corrective Action Section B			Verification Section C	Approval Chief Eng	Approval QC Inspector
			Initial Chief Eng	Action Description Chief Eng	Sign & Date			

NOTE: Date & initial all entries

H:\fFORMS\Quality Assurance\approved QA\NCRWO RevE

Work Order ID 73906

Monday, September 19, 2011 8:12:13 AM

Item ID: D3913-041 **Accept** **Setup Start**

Revision ID:

Item Name: Long Basket Base Assemby, 350 **Stop**

Start Date: 9/19/2011 **Start Qty:** 1.00 **Cust Item ID:**

Required Date: 9/28/2011 **Req'd Qty:** 1.00 **Customer:**

Reference:

Approvals: **Process Plan:** _____ **Date:** _____ **Tooling:** _____ **Date:** _____ **Run Start**

QC: _____ **Date:** _____ **SPC (Y/N):** _____ **Date:** _____ **Stop**

Sequence ID/ Work Center ID	Operation Description	Set Up/ Run Hours	Tool ID	Tool #	Plan Code	Accept Qty	Reject Qty	Reject Number	Insp. Stamp
150	Assemble as per dwg	0.00							
HandFinish	**Memo**	0.00							
Hand Finishing	Pick Kit						11-09-23.		
160	QC5- Inspect part completeness to step on W/O	0.00							
QC	**Memo**	0.00	8 11/09/23						
Quality Control									
170	Identify as per dwg & Stock Location: w/o	0.00	D4030-041						
Packaging	**Memo**	0.00	73905			1	0	11/09/23	
Packaging									

Dart Aerospace Ltd

W/O:		WORK ORDER CHANGES					
DATE	STEP	PROCEDURE CHANGE	By	Date	Qty	Approval Chief Eng / Prod Mgr	Approval QC Inspector

Part No: _____ **PAR #:** _____ **Fault Category:** _____ **NCR:** Yes No **DQA:** _____ **Date:** _____

Resolution: _____ **Disposition:** _____ **QA: N/C Closed:** _____ **Date:** _____

NCR:		WORK ORDER NON-CONFORMANCE (NCR)						
DATE	STEP	Description of NC Section A	Corrective Action Section B			Verification Section C	Approval Chief Eng	Approval QC Inspector
			Initial Chief Eng	Action Description Chief Eng	Sign & Date			

NOTE: Date & initial all entries

H:\fFORMS\Quality Assurance\approved QA\NCRWO RevE

Work Order ID 73906

Monday, September 19, 2011 8:12:13 AM

Item ID: D3913-041 **Accept** **Setup Start**

Revision ID:

Item Name: Long Basket Base Assemby, 350 **Stop**

Start Date: 9/19/2011 **Start Qty:** 1.00 **Cust Item ID:**

Required Date: 9/28/2011 **Req'd Qty:** 1.00 **Customer:**

Reference:

Approvals: **Process Plan:** _____ **Date:** _____ **Tooling:** _____ **Date:** _____ **Run Start**

QC: _____ **Date:** _____ **SPC (Y/N):** _____ **Date:** _____ **Stop**

Sequence ID/ Work Center ID	Operation Description	Set Up/ Run Hours	Tool ID	Tool #	Plan Code	Accept Qty	Reject Qty	Reject Number	Insp. Stamp
180	QC21- Final Inspection - Work Order Release	0.00						11/9/27	
QC	Memo	0.00							
Quality Control									

MF
11-09-23

Dart Aerospace Ltd

W/O:		WORK ORDER CHANGES					
DATE	STEP	PROCEDURE CHANGE	By	Date	Qty	Approval Chief Eng / Prod Mgr	Approval QC Inspector

Part No: _____ **PAR #:** _____ **Fault Category:** _____ **NCR:** Yes No **DQA:** _____ **Date:** _____

Resolution: _____ **Disposition:** _____ **QA: N/C Closed:** _____ **Date:** _____

NCR:		WORK ORDER NON-CONFORMANCE (NCR)						
DATE	STEP	Description of NC Section A	Corrective Action Section B			Verification Section C	Approval Chief Eng	Approval QC Inspector
			Initial Chief Eng	Action Description Chief Eng	Sign & Date			

NOTE: Date & initial all entries

H:\fFORMS\Quality Assurance\approved QA\NCRWO RevE

Picklist Print

Monday, September 19, 2011 8:12:09 AM

8

Work Order ID: 73906

Parent Item: D3913-041

Parent Item Name: Long Basket Base Assemby, 350

Start Date: 9/19/2011 **Required Date:** 9/28/2011

Start Qty: 1.00 **Required Qty:** 1.00

Comments: IPP Rev:A new issue DD 10.03.19 verified by:EC IPP Rev:B
chg qty's DD 10.04.12 verified by:EC

Component Item ID/ Item Name	Replacement Item ID	Mfg/ Purch	Bin Item	Primary Location	Last Location	Route Seq ID	Unit of Measure	Qty on Hand	Qty per Kit	Total Qty	Qty Issued	Date Issued	Status
D2581 Mounting Bracket		Manufactured	No			100	Each	36.0000	2	2	PMB	11/09/22	
				Location		**Loc Qty**		**Loc Code**					
				WA		36							
					69258	3							
					69739	2							
					70766	2							
					73079	29				2			
D3913-1 Rib		Manufactured	No			100	Each	9.0000	1	1	PMB	11/09/22	
				Location		**Loc Qty**		**Loc Code**					
				WA		6							
					59089	1							
					69260	2							
					70346	1							
					72086	1							
					73532	1				1			
				WA006		3							
					73647	3							

Dart Aerospace Ltd

W/O:		WORK ORDER CHANGES					
DATE	STEP	PROCEDURE CHANGE	By	Date	Qty	Approval Chief Eng / Prod Mgr	Approval QC Inspector

Part No: _____ **PAR #:** _____ **Fault Category:** _____ **NCR:** Yes No **DQA:** _____ **Date:** _____

Resolution: _____ **Disposition:** _____ **QA: N/C Closed:** _____ **Date:** _____

NCR:		WORK ORDER NON-CONFORMANCE (NCR)						
DATE	STEP	Description of NC Section A	Corrective Action Section B			Verification Section C	Approval Chief Eng	Approval QC Inspector
			Initial Chief Eng	Action Description Chief Eng	Sign & Date			

NOTE: Date & initial all entries

H:\fFORMS\Quality Assurance\approved QA\NCRWO RevE

Picklist Print

Monday, September 19, 2011 8:12:09 AM

Work Order ID: 73906

Parent Item: D3913-041

Parent Item Name: Long Basket Base Assemby, 350

Start Date: 9/19/2011 **Required Date:** 9/28/2011

Start Qty: 1.00 **Required Qty:** 1.00

D3913-15 Wide Handle Plate	Manufactured	No	100	Each	7.0000	1	1	PMB 11/09/22

Location	Loc Qty	Loc Code	
WA	3		
69647	3		1
WA005	4		
69012	1		
72550	3		

D3913-3 Rib	Manufactured	No	100	Each	8.0000	1	1	PMB 11/09/22

Location	Loc Qty	Loc Code	
WA	7		
69160	1		
72664	3		1
73533	3		
WA006	1		
69646	1		

D3913-7 Rib	Manufactured	No	100	Each	12.0000	2	2	PMB 11/09/22

Location	Loc Qty	Loc Code	
WA	4		
69521	2		
70334	2		
WA006	8		
65278	1		
66435	1		
72457	6		2

Dart Aerospace Ltd

W/O:		WORK ORDER CHANGES					
DATE	STEP	PROCEDURE CHANGE	By	Date	Qty	Approval Chief Eng / Prod Mgr	Approval QC Inspector

Part No: _____ **PAR #:** _____ **Fault Category:** _____ **NCR:** Yes No **DQA:** _____ **Date:** _____

Resolution: _____ **Disposition:** _____ **QA: N/C Closed:** _____ **Date:** _____

NCR:		WORK ORDER NON-CONFORMANCE (NCR)						
DATE	STEP	Description of NC Section A	Corrective Action Section B			Verification Section C	Approval Chief Eng	Approval QC Inspector
			Initial Chief Eng	Action Description Chief Eng	Sign & Date			

NOTE: Date & initial all entries

H:\FORMS\Quality Assurance\approved QA\NCRWO RevE

Picklist Print

Monday, September 19, 2011 8:12:10 AM

Work Order ID: 73906

Parent Item: D3913-041

Parent Item Name: Long Basket Base Assemby, 350

Start Date: 9/19/2011 **Required Date:** 9/28/2011

Start Qty: 1.00 **Required Qty:** 1.00

D3913-9 Hinge Rib	Manufactured	No	100	Each	8.0000	1	1	PMB 11/09/22

Location	Loc Qty	Loc Code	
WA	6		
72665	3		1
73530	3		
WA006	2		
70138	1		
71479	1		

D3916-041 Rib Assembly	Manufactured	No	100	Each	6.0000	2	2	PMB 11/09/22

Location	Loc Qty	Loc Code	
WA	6		
69161	2		
72543	4		2

D3916-5 Light Rib	Manufactured	No	100	Each	13.0000	3	3	PMB 11/09/22

Location	Loc Qty	Loc Code	
WA	4		
59088	3		
71938	1		
WA006	9		
72557	9		3

Dart Aerospace Ltd

W/O:		WORK ORDER CHANGES					
DATE	STEP	PROCEDURE CHANGE	By	Date	Qty	Approval Chief Eng / Prod Mgr	Approval QC Inspector

Part No: _____ **PAR #:** _____ **Fault Category:** _____ **NCR:** Yes No **DQA:** _____ **Date:** _____

Resolution: _____ **Disposition:** _____ **QA: N/C Closed:** _____ **Date:** _____

NCR:		WORK ORDER NON-CONFORMANCE (NCR)						
DATE	STEP	Description of NC Section A	Corrective Action Section B			Verification Section C	Approval Chief Eng	Approval QC Inspector
			Initial Chief Eng	Action Description Chief Eng	Sign & Date			

NOTE: Date & initial all entries

H:\fFORMS\Quality Assurance\approved QA\NCRWO RevE

Picklist Print

Monday, September 19, 2011 8:12:10 AM

Work Order ID: 73906

Parent Item: D3913-041

Parent Item Name: Long Basket Base Assemby, 350

Start Date: 9/19/2011 **Required Date:** 9/28/2011

Start Qty: 1.00 **Required Qty:** 1.00

D4016-1	Manufactured	No	100	Each	31.0000	3	3	PMB 11/09/22
Hinge Half, Base								

Location	Loc Qty	Loc Code	
WA	31		
66418	0		
68426	3		
72009	10		3
72757	18		

D4017-7	Manufactured	No	100	Each	6.0000	1	1	PMB 11/09/22
Rib								

Location	Loc Qty	Loc Code	
WA	2		
69730	1		
72556	1		
WA005	4		
72008	1		
72964	3		1

D4017-9	Manufactured	No	100	Each	14.0000	2	2	PMB 11/09/22
Rib								

Location	Loc Qty	Loc Code	
WA	14		
70341	2		
72554	6		2
73531	6		

Dart Aerospace Ltd

W/O:		WORK ORDER CHANGES					
DATE	STEP	PROCEDURE CHANGE	By	Date	Qty	Approval Chief Eng / Prod Mgr	Approval QC Inspector

Part No: _____ **PAR #:** _____ **Fault Category:** _____ **NCR:** Yes No **DQA:** _____ **Date:** _____

Resolution: _____ **Disposition:** _____ **QA: N/C Closed:** _____ **Date:** _____

NCR:		WORK ORDER NON-CONFORMANCE (NCR)						
DATE	STEP	Description of NC Section A	Corrective Action Section B			Verification Section C	Approval Chief Eng	Approval QC Inspector
			Initial Chief Eng	Action Description Chief Eng	Sign & Date			

NOTE: Date & initial all entries

H:\FORMS\Quality Assurance\approved QA\NCRWO RevE

Picklist Print

Monday, September 19, 2011 8:12:10 AM

Work Order ID: 73906

Parent Item: D3913-041

Parent Item Name: Long Basket Base Assemby, 350

Start Date: 9/19/2011 **Required Date:** 9/28/2011

Start Qty: 1.00 **Required Qty:** 1.00

D4020-11	Manufactured	No	100	Each	8.0000	2	2	PMB 11/09/22
End Mesh, Basket								

Location	Loc Qty	Loc Code	
WA	8		
69648	2		
72636	6		2

D4021-1	Manufactured	No	100	Each	27.0000	3	3	PMB 11/09/22
Handle Plate								

Location	Loc Qty	Loc Code	
WA	15		
69518	6		
69777	9		3
WA005	12		
73649	12		

D4034-041	Manufactured	No	100	Each	1.0000	1	1	PMB 11/09/22
Aft Upper Rib Assembly								

Location	Loc Qty	Loc Code	
WA006 B 72551	1		1
69157	1		

D4034-043	Manufactured	No	100	Each	1.0000	1	1	PMB 11/09/22
Fwd Upper Rib Assembly								

Location	Loc Qty	Loc Code	
WA006 B 72458	1		1
70241	1		

Dart Aerospace Ltd

W/O:		WORK ORDER CHANGES					
DATE	STEP	PROCEDURE CHANGE	By	Date	Qty	Approval Chief Eng / Prod Mgr	Approval QC Inspector

Part No: _____ **PAR #:** _____ **Fault Category:** _____ **NCR:** Yes No **DQA:** _____ **Date:** _____

Resolution: _____ **Disposition:** _____ **QA: N/C Closed:** _____ **Date:** _____

NCR:		WORK ORDER NON-CONFORMANCE (NCR)						
DATE	STEP	Description of NC Section A	Corrective Action Section B			Verification Section C	Approval Chief Eng	Approval QC Inspector
			Initial Chief Eng	Action Description Chief Eng	Sign & Date			

NOTE: Date & initial all entries

H:\fFORMS\Quality Assurance\approved QA\NCRWO RevE

Picklist Print

Monday, September 19, 2011 8:12:10 AM

Work Order ID: 73906

Parent Item: D3913-041

Parent Item Name: Long Basket Base Assemby, 350

Start Date: 9/19/2011 **Required Date:** 9/28/2011

Start Qty: 1.00 **Required Qty:** 1.00

M304EX0.75-16F Expanded Metal Flat SS	Purchased	No	100	sf	473.8659	33	33	PMB 11/09/23

Location	Loc Qty	Loc Code	
WA	473.865935		
115012	3.94		
117197	102.9036		
117455	16.0341		
117896	53.3264		
118153	82.2683		
118248	33.0983		
118450	0.013255		
118597	182.28198		33

AN3-10A Bolt	Purchased	No	150	Each	90.0000	6	6	SP

Location	Loc Qty	Loc Code	
ST351	90		
117795	90		6x

AN960JD8 Washer	NAS1149DN832J	Purchased	No	M117887 2x	150	Each	0.0000	2	2	SP
D2931 Bumper		Manufactured	No		150	Each	588.0000	2	2	SP 11-09-23

Location	Loc Qty	Loc Code	
ST504	588		
46064	588		2x

Dart Aerospace Ltd

W/O:		WORK ORDER CHANGES					
DATE	STEP	PROCEDURE CHANGE	By	Date	Qty	Approval Chief Eng / Prod Mgr	Approval QC Inspector

Part No: _____ **PAR #:** _____ **Fault Category:** _____ **NCR:** Yes No **DQA:** _____ **Date:** _____

Resolution: _____ **Disposition:** _____ **QA: N/C Closed:** _____ **Date:** _____

NCR:		WORK ORDER NON-CONFORMANCE (NCR)						
DATE	STEP	Description of NC Section A	Corrective Action Section B			Verification Section C	Approval Chief Eng	Approval QC Inspector
			Initial Chief Eng	Action Description Chief Eng	Sign & Date			

NOTE: Date & initial all entries

H:\fFORMS\Quality Assurance\approved QA\NCRWO RevE

Picklist Print

Monday, September 19, 2011 8:12:10 AM

Work Order ID: 73906

Parent Item: D3913-041

Parent Item Name: Long Basket Base Assemby, 350

Start Date: 9/19/2011 **Required Date:** 9/28/2011

Start Qty: 1.00 **Required Qty:** 1.00

D4021-5	Manufactured	No	150	Each	42.0000	2	2	SP
Blanking Plate								

Location		Loc Qty	Loc Code	
GA		42		
	73478	42		2x

MS20600-AD4W3	Purchased	No	150	Each	1,467.000	2	2	SP
Cherry Rivets								

Location		Loc Qty	Loc Code	
GA		930		
	118626	930		2x
ST321		404		
	111636	48		
	117505	321		
	117601	35		
WA018		133		
	107939	133		

MS21042L3	Purchased	No	150	Each	2,601.000	6	6	SP 11-09-22.
Nut								

Location		Loc Qty	Loc Code	
ST300		2601		
	117441	24		
	117601	372		6x
	117885	205		
	118451	1000		
	118927	1000		

Dart Aerospace Ltd

W/O:		WORK ORDER CHANGES					
DATE	STEP	PROCEDURE CHANGE	By	Date	Qty	Approval Chief Eng / Prod Mgr	Approval QC Inspector

Part No: _____ **PAR #:** _____ **Fault Category:** _____ **NCR:** Yes No **DQA:** _____ **Date:** _____

Resolution: _____ **Disposition:** _____ **QA: N/C Closed:** _____ **Date:** _____

NCR:		WORK ORDER NON-CONFORMANCE (NCR)						
DATE	STEP	Description of NC Section A	Corrective Action Section B			Verification Section C	Approval Chief Eng	Approval QC Inspector
			Initial Chief Eng	Action Description Chief Eng	Sign & Date			

NOTE: Date & initial all entries

H:\fFORMS\Quality Assurance\approved QA\NCRWO RevE

Picklist Print

Monday, September 19, 2011 8:12:10 AM

Work Order ID: 73906

Parent Item: D3913-041

Parent Item Name: Long Basket Base Assemby, 350

Start Date: 9/19/2011 **Required Date:** 9/28/2011

Start Qty: 1.00 **Required Qty:** 1.00

NAS1149F0332P	Purchased	No	150	Each	162.0000	12	12	
WASHER								Sop 11-09-23

Location	Loc Qty	Loc Code	
ST275	162		
117735	63		
118354	96		12x
17317	3		

Dart Aerospace Ltd

W/O:		WORK ORDER CHANGES					
DATE	STEP	PROCEDURE CHANGE	By	Date	Qty	Approval Chief Eng / Prod Mgr	Approval QC Inspector

Part No: _____ **PAR #:** _____ **Fault Category:** _____ **NCR:** Yes No **DQA:** _____ **Date:** _____

Resolution: _____ **Disposition:** _____ **QA: N/C Closed:** _____ **Date:** _____

NCR:		WORK ORDER NON-CONFORMANCE (NCR)						
DATE	STEP	Description of NC Section A	Corrective Action Section B			Verification Section C	Approval Chief Eng	Approval QC Inspector
			Initial Chief Eng	Action Description Chief Eng	Sign & Date			

NOTE: Date & initial all entries

H:\fFORMS\Quality Assurance\approved QA\NCRWO RevE

ITEM	QTY -041	P/N	DESCRIPTION
	X	D3913-041	LONG BASKET BASE ASSY (350)
1	1	D3913-101	TUBULAR ASSY (350 SHORT BASKET)
2	1	D3913-15	WIDE HANDLE PLATE
3	2	D2581	MOUNTING BRACKET
4	2	D2931	BUMPER
5	3	D4016-1	HINGE HALF, BASE
6	1	D4020-1	MESH (350 BASKET LONG BASE)
7	2	D4020-11	END MESH, BASKET
8	3	D4021-1	HANDLE PLATE
9	2	D4021-5	BLANKING PLATE
10	6	AN3-10A	BOLT
11	2	AN960JD8	WASHER
12	2	MS20600AD4W3	BLIND RIVET
13	6	MS21042L3	NUT
14	12	NAS1149F0332P	WASHER

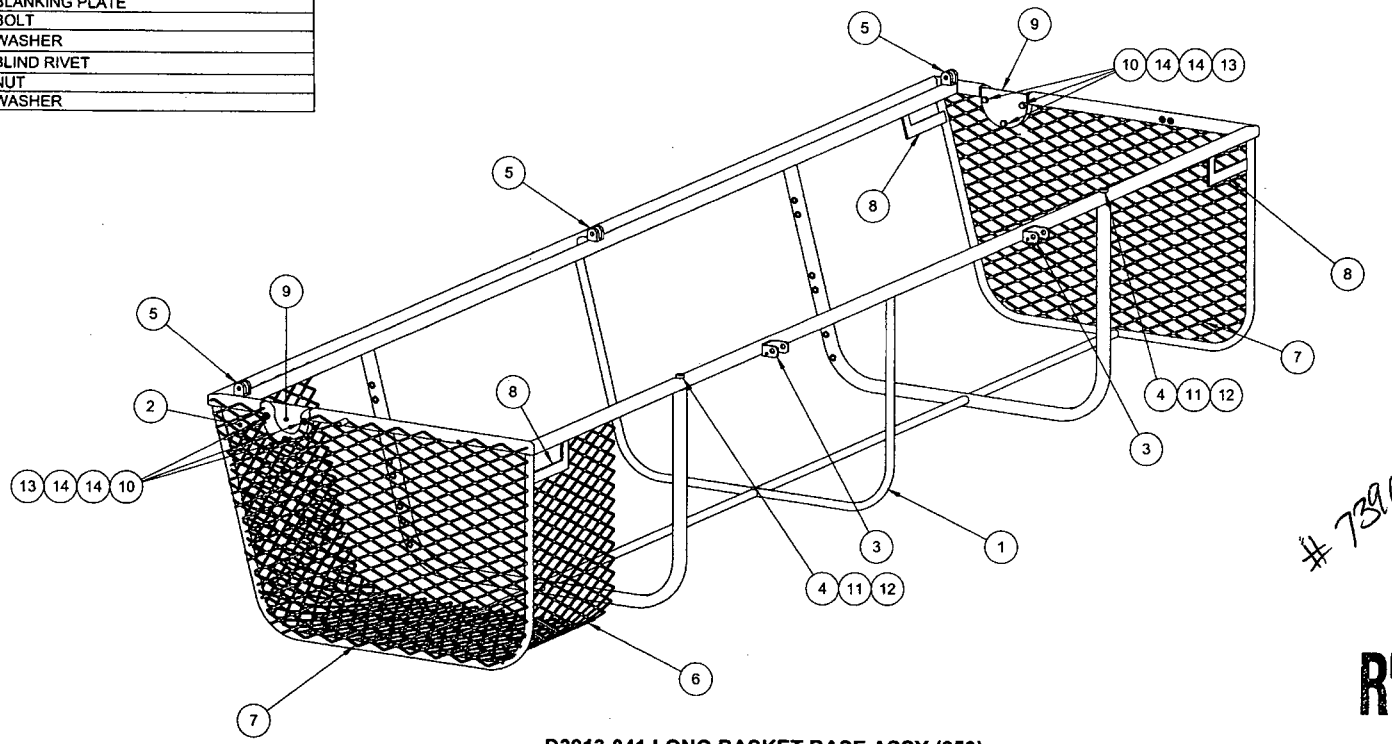

73906

RELEASED
2010 -03- 22

D3913-041 LONG BASKET BASE ASSY (350)
(MESH SHOWN LOCALLY FOR CLARITY)

NOTES:
1) MATERIAL: N/A
2) FINISH: POWDER COAT WHITE (4.3.5.2) PER DART QSI 005 4.3
3) TOLERANCES: PER DART QSI 018 UNLESS OTHERWISE NOTED
4) UNITS: INCHES UNLESS OTHERWISE NOTED
5) BREAK SHARP EDGES: N/A
6) IDENTIFICATION: NONE
7) WEIGHT: 43.3 lbs APPROX
8) INSTALL AFTER FINISH
9) MASK HOLES PRIOR TO POWDER COAT
10) WELD PER DART QSI 004

REV.	DESCRIPTION	BY	DATE
A	NEW ISSUE	JPH	10.03.16

DESIGN	AJS	DART AEROSPACE LTD HAWKESBURY, ONTARIO, CANADA
DRAWN	JPH	
CHECKED		DRAWING NO. D3913 — REV. A — SHEET 1 OF 6
MFG. APPR.		
APPROVED		TITLE: LONG BASKET BASE ASSY (350) — SCALE: NTS
DE APPR.		
DATE	10.03.16	

COPYRIGHT © 2010 BY DART AEROSPACE LTD
THIS DOCUMENT IS PRIVATE AND CONFIDENTIAL AND IS SUPPLIED ON THE EXPRESS CONDITION THAT IT IS NOT TO BE USED FOR ANY PURPOSE OR COPIED OR COMMUNICATED TO ANY OTHER PERSON WITHOUT WRITTEN PERMISSION FROM DART AEROSPACE LTD

Dart Aerospace Ltd

W/O:		WORK ORDER CHANGES					
DATE	STEP	PROCEDURE CHANGE	By	Date	Qty	Approval Chief Eng / Prod Mgr	Approval QC Inspector

Part No: _____ **PAR #:** _____ **Fault Category:** _____ **NCR:** Yes No **DQA:** _____ **Date:** _____

Resolution: _____ **Disposition:** _____ **QA: N/C Closed:** _____ **Date:** _____

NCR:		WORK ORDER NON-CONFORMANCE (NCR)						
DATE	STEP	Description of NC Section A	Corrective Action Section B			Verification Section C	Approval Chief Eng	Approval QC Inspector
			Initial Chief Eng	Action Description Chief Eng	Sign & Date			

NOTE: Date & initial all entries

H:\fFORMS\Quality Assurance\approved QA\NCRWO RevE

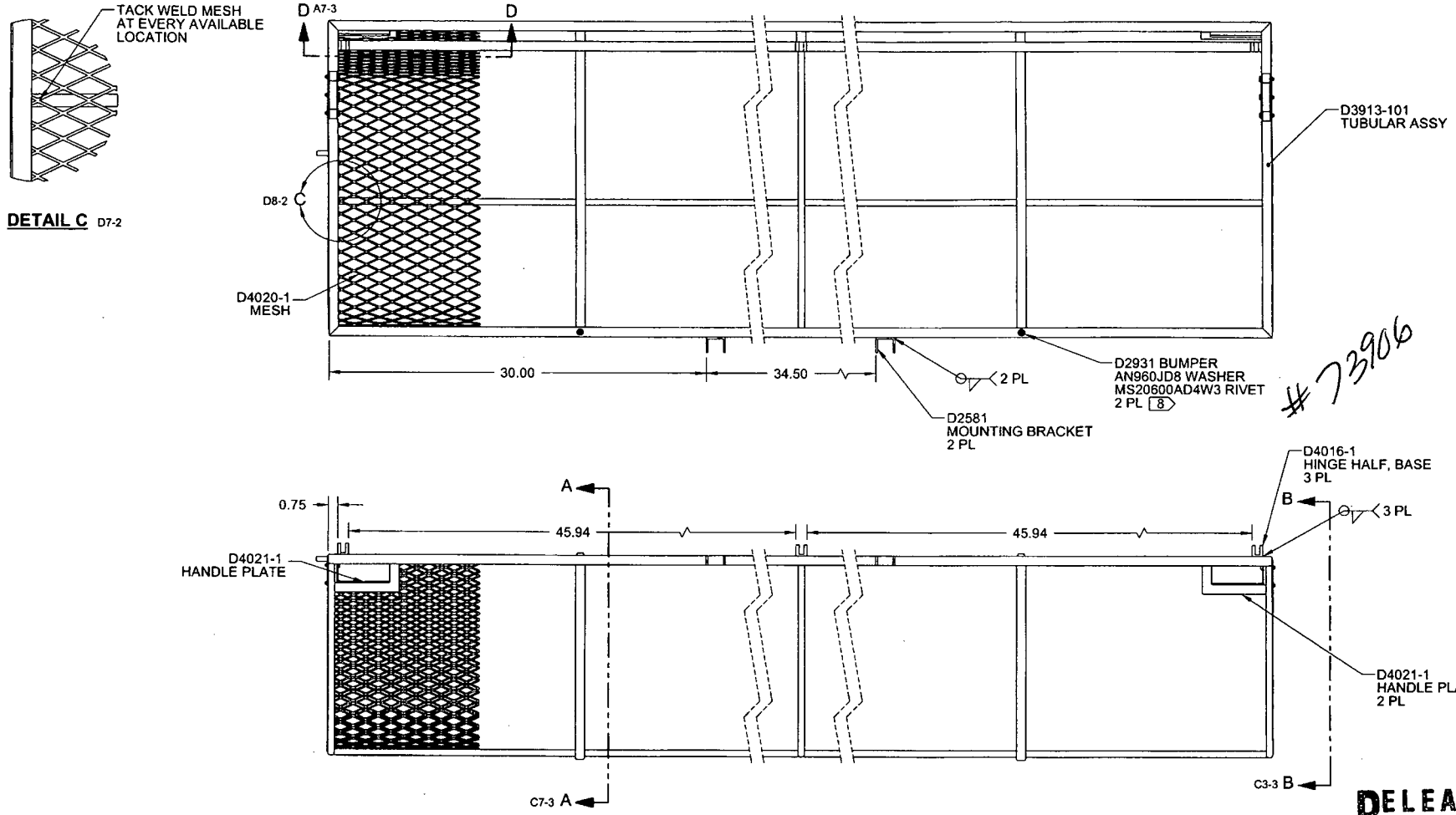

D3913-041 LONG BASKET BASE ASSY (350)
(MESH SHOWN LOCALLY FOR CLARITY)

RELEASED
2010 -09- 22

DESIGN	AJS	**DART AEROSPACE LTD** HAWKESBURY, ONTARIO, CANADA
DRAWN	JRH	
CHECKED		DRAWING NO. D3913 — REV. A — SHEET 2 OF 6
MFG. APPR.		
APPROVED		TITLE: LONG BASKET BASE ASSY (350) — SCALE: NTS
DE APPR.		
DATE	10.03.16	

COPYRIGHT © 2010 BY DART AEROSPACE LTD
THIS DOCUMENT IS PRIVATE AND CONFIDENTIAL AND IS SUPPLIED ON THE EXPRESS CONDITION THAT IT IS NOT TO BE USED FOR ANY PURPOSE OR COPIED OR COMMUNICATED TO ANY OTHER PERSON WITHOUT WRITTEN PERMISSION FROM DART AEROSPACE LTD

Dart Aerospace Ltd

W/O:		WORK ORDER CHANGES					
DATE	STEP	PROCEDURE CHANGE	By	Date	Qty	Approval Chief Eng / Prod Mgr	Approval QC Inspector

Part No: _____ **PAR #:** _____ **Fault Category:** _____ **NCR:** Yes No **DQA:** _____ **Date:** _____

Resolution: _____ **Disposition:** _____ **QA: N/C Closed:** _____ **Date:** _____

NCR:		WORK ORDER NON-CONFORMANCE (NCR)						
DATE	STEP	Description of NC Section A	Corrective Action Section B			Verification Section C	Approval Chief Eng	Approval QC Inspector
			Initial Chief Eng	Action Description Chief Eng	Sign & Date			

NOTE: Date & initial all entries

H:\fFORMS\Quality Assurance\approved QA\NCRWO RevE

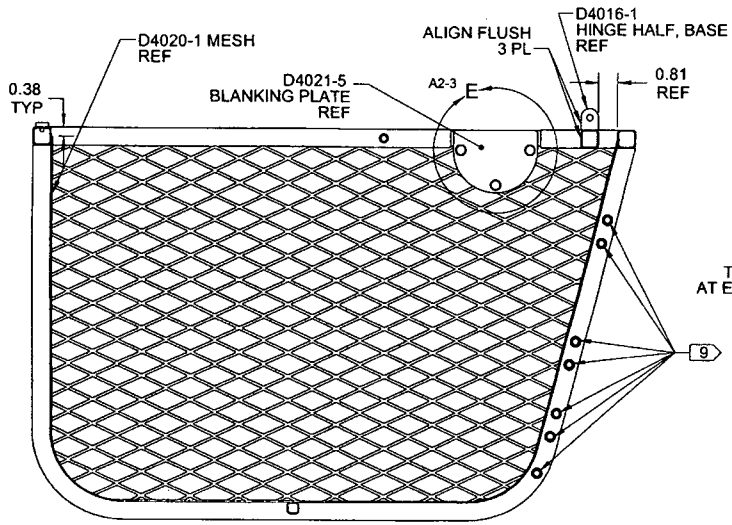

SECTION A-A A5-2

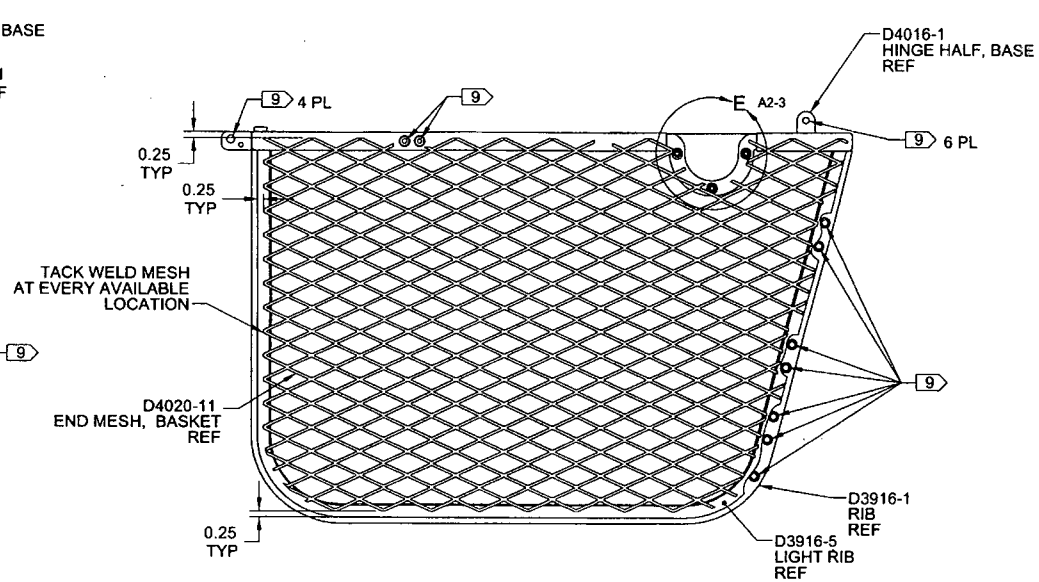

VIEW B-B A2-2

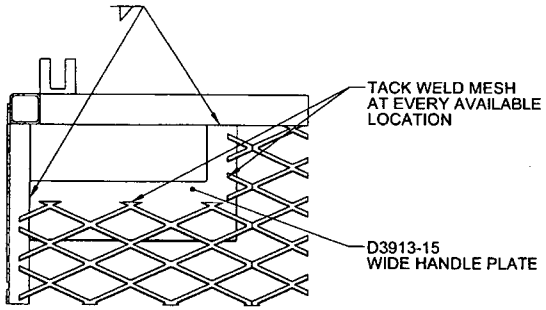

SECTION D-D D7-2
TYPICAL FOR ALL
HANDLE PLATES

#73906

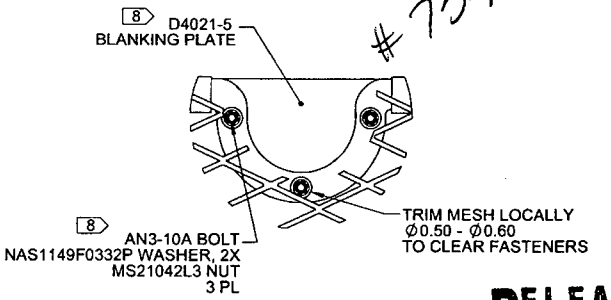

DETAIL E D2-3 D6-3

MP

RELEASED
2010-03-22

DESIGN	AJS	**DART AEROSPACE LTD** HAWKESBURY, ONTARIO, CANADA
DRAWN	JPH	
CHECKED		DRAWING NO. D3913 — REV. A — SHEET 3 OF 6
MFG. APPR.		
APPROVED		TITLE: LONG BASKET BASE ASSY (350) — SCALE: NTS
DE APPR.		
DATE	10.03.16	

COPYRIGHT © 2010 BY DART AEROSPACE LTD
THIS DOCUMENT IS PRIVATE AND CONFIDENTIAL AND IS SUPPLIED ON THE EXPRESS CONDITION THAT IT IS NOT TO BE USED FOR ANY PURPOSE OR COPIED OR COMMUNICATED TO ANY OTHER PERSON WITHOUT WRITTEN PERMISSION FROM DART AEROSPACE LTD.

Dart Aerospace Ltd

W/O:		WORK ORDER CHANGES					
DATE	STEP	PROCEDURE CHANGE	By	Date	Qty	Approval Chief Eng / Prod Mgr	Approval QC Inspector

Part No: _____ **PAR #:** _____ **Fault Category:** _____ **NCR:** Yes No **DQA:** _____ **Date:** _____

Resolution: _____ **Disposition:** _____ **QA: N/C Closed:** _____ **Date:** _____

NCR:		WORK ORDER NON-CONFORMANCE (NCR)						
DATE	STEP	Description of NC Section A	Corrective Action Section B			Verification Section C	Approval Chief Eng	Approval QC Inspector
			Initial Chief Eng	Action Description Chief Eng	Sign & Date			

NOTE: Date & initial all entries

H:\fFORMS\Quality Assurance\approved QA\NCRWO RevE

ITEM	QTY -101	P/N	DESCRIPTION
	X	D3913-101	TUBULAR ASSY (350 LONG BASKET)
1	1	D3913-1	RIB
2	1	D3913-3	RIB
3	2	D3913-7	RIB
4	1	D3913-9	HINGE RIB
5	3	D3916-5	LIGHT RIB
6	2	D3916-041	RIB ASSY
7	1	D4017-7	RIB
8	2	D4017-9	RIB
9	1	D4034-041	AFT UPPER RIB ASSY
10	1	D4034-043	FWD UPPER RIB ASSY

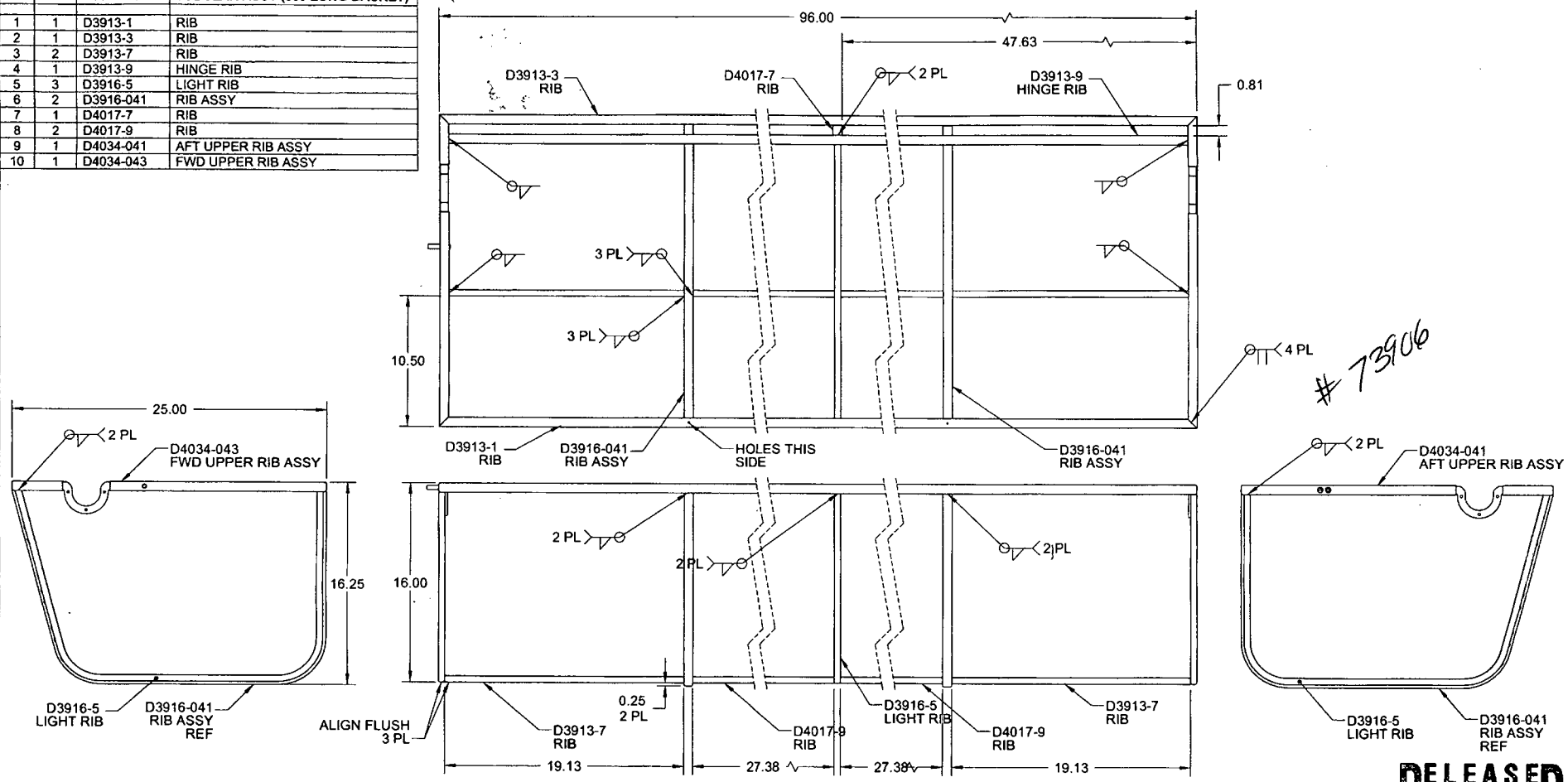

73906

8 **D3913-101 TUBULAR ASSY (350 SHORT BASKET)**

RELEASED 2010 -03- 22

NOTES:
1) MATERIAL: N/A
2) FINISH: NONE
3) TOLERANCES: PER DART QSI 018 UNLESS OTHERWISE NOTED
4) UNITS: INCHES UNLESS OTHERWISE NOTED
5) BREAK SHARP EDGES: 0.005 TO 0.010 MAX
6) IDENTIFICATION: N/A
7) WEIGHT: 22.53 lbs
8) TOLERANCE FOR XX.XX DIMENSIONS ±0.06 FOR D3913-101
9) WELD PER DART QSI 004

DESIGN	AJS	DART AEROSPACE LTD HAWKESBURY, ONTARIO, CANADA
DRAWN	JPH	
CHECKED		DRAWING NO. D3913 — REV. A — SHEET 4 OF 6
MFG. APPR.		
APPROVED		TITLE: LONG BASKET BASE ASSY (350) — SCALE: NTS
DE APPR.		
DATE	10.03.16	

COPYRIGHT © 2010 BY DART AEROSPACE LTD
THIS DOCUMENT IS PRIVATE AND CONFIDENTIAL AND IS SUPPLIED ON THE EXPRESS CONDITION THAT IT IS NOT TO BE USED FOR ANY PURPOSE OR COPIED OR COMMUNICATED TO ANY OTHER PERSON WITHOUT WRITTEN PERMISSION FROM DART AEROSPACE LTD.

Dart Aerospace Ltd

W/O:		WORK ORDER CHANGES					
DATE	STEP	PROCEDURE CHANGE	By	Date	Qty	Approval Chief Eng / Prod Mgr	Approval QC Inspector

Part No: _____ **PAR #:** _____ **Fault Category:** _____ **NCR:** Yes No **DQA:** _____ **Date:** _____

Resolution: _____ **Disposition:** _____ **QA: N/C Closed:** _____ **Date:** _____

NCR:		WORK ORDER NON-CONFORMANCE (NCR)						
DATE	STEP	Description of NC Section A	Corrective Action Section B			Verification Section C	Approval Chief Eng	Approval QC Inspector
			Initial Chief Eng	Action Description Chief Eng	Sign & Date			

NOTE: Date & initial all entries

H:\fFORMS\Quality Assurance\approved QA\NCRWO RevE

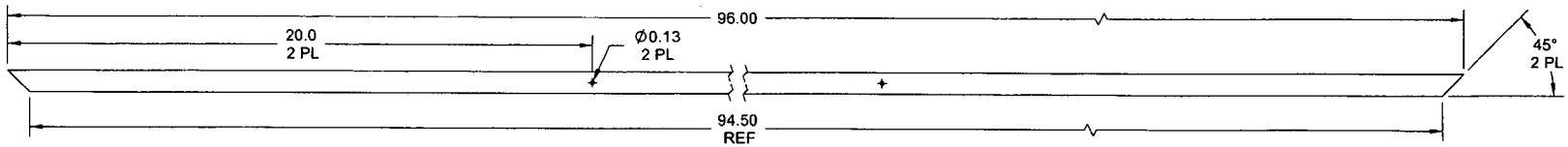

D3913-1 RIB

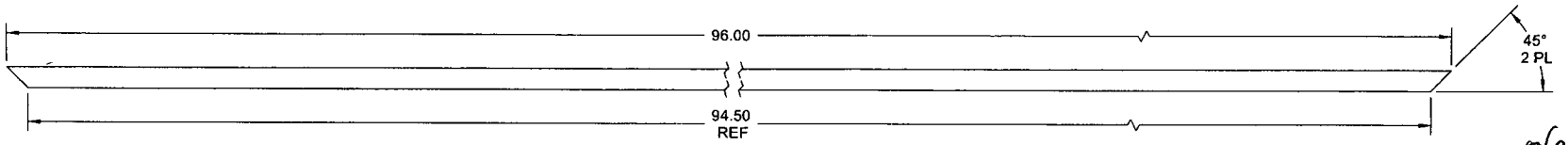

D3913-3 RIB

#73906

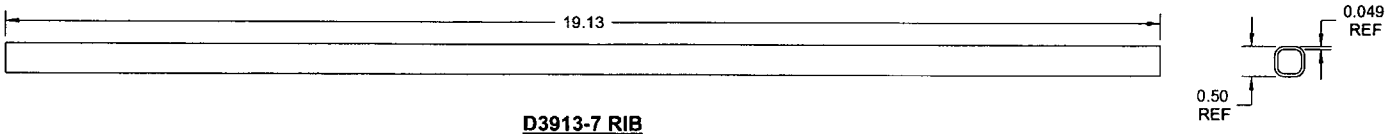

D3913-7 RIB

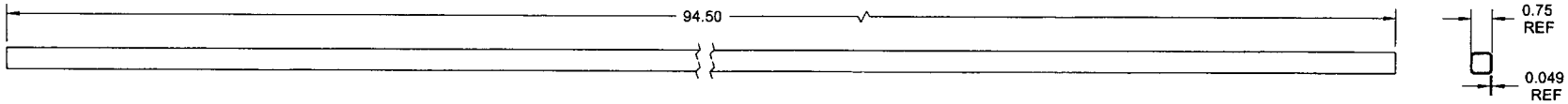

D3913-9 HINGE RIB

NOTES:
1) MATERIAL -1, -3, -9: AISI 304/316 STAINLESS STEEL SQUARE TUBE, 0.75 X 0.75 X 0.049 WALL
REF DART SPEC. M304TS0.750W.049

-7: AISI 304/316 STAINLESS STEEL SQUARE TUBE, 0.50 X 0.50 X 0.049 WALL
REF DART SPEC. M304TS0.500W.049

2) FINISH: NONE
3) TOLERANCES: PER DART QSI 018 UNLESS OTHERWISE NOTED
4) UNITS: INCHES UNLESS OTHERWISE NOTED
5) BREAK SHARP EDGES: 0.005 TO 0.010 MAX
6) IDENTIFICATION: N/A
7) WEIGHT: SEE ASSEMBLED WEIGHTS

RELEASED
2010 -03- 22

DESIGN	AJS	**DART AEROSPACE LTD** HAWKESBURY, ONTARIO, CANADA
DRAWN	JPH	
CHECKED		DRAWING NO. D3913 — REV. A — SHEET 5 OF 6
MFG. APPR.		
APPROVED		TITLE: LONG BASKET BASE ASSY (350) — SCALE: NTS
DE APPR.		
DATE	10.03.16	

COPYRIGHT © 2010 BY DART AEROSPACE LTD
THIS DOCUMENT IS PRIVATE AND CONFIDENTIAL AND IS SUPPLIED ON THE EXPRESS CONDITION THAT IT IS NOT TO BE USED FOR ANY PURPOSE OR COPIED OR COMMUNICATED TO ANY OTHER PERSON WITHOUT WRITTEN PERMISSION FROM DART AEROSPACE LTD

Dart Aerospace Ltd

W/O:		WORK ORDER CHANGES					
DATE	STEP	PROCEDURE CHANGE	By	Date	Qty	Approval Chief Eng / Prod Mgr	Approval QC Inspector

Part No: _____ **PAR #:** _____ **Fault Category:** _____ **NCR:** Yes No **DQA:** _____ **Date:** _____

Resolution: _____ **Disposition:** _____ **QA: N/C Closed:** _____ **Date:** _____

NCR:		WORK ORDER NON-CONFORMANCE (NCR)						
DATE	STEP	Description of NC Section A	Corrective Action Section B			Verification Section C	Approval Chief Eng	Approval QC Inspector
			Initial Chief Eng	Action Description Chief Eng	Sign & Date			

NOTE: Date & initial all entries

H:\FORMS\Quality Assurance\approved QA\NCRWO RevE

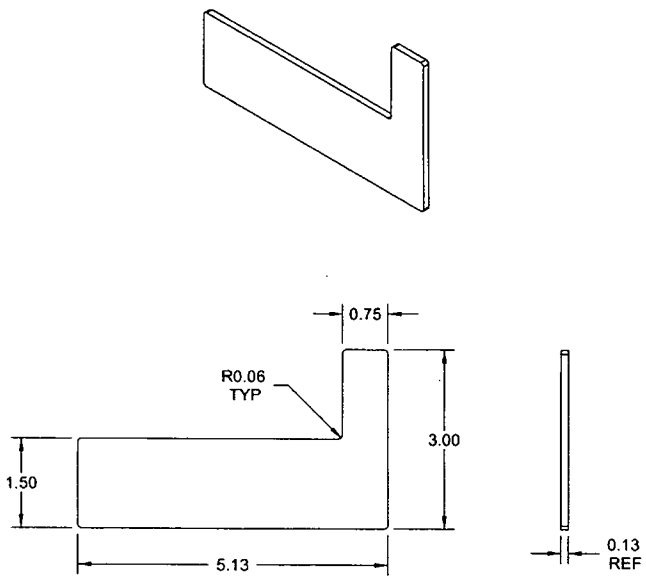

D3913-15 WIDE HANDLE PLATE

#73906

RELEASED
2010 -03- 22

NOTES:
1) MATERIAL: 304/316 STAINLESS STEEL SHEET ANNEALED 2B FINISH,
PER MIL-S-5059 OR AMS 5513/5524 OR ASTM A240 OR ASME SA240
REF DART SPEC M304S11GA
2) FINISH : NONE
3) TOLERANCES: PER DART QSI 018 UNLESS OTHERWISE NOTED
4) UNITS: INCHES UNLESS OTHERWISE NOTED
5) BREAK SHARP EDGES: 0.005 TO 0.010 MAX
6) IDENTIFICATION: N/A
7) WEIGHT: 0.31 lbs

DESIGN	AJS	**DART AEROSPACE LTD** HAWKESBURY, ONTARIO, CANADA
DRAWN	JPH	
CHECKED		DRAWING NO. D3913 — REV. A — SHEET 6 OF 6
MFG. APPR.		
APPROVED		TITLE: LONG BASKET BASE ASSY (350) — SCALE: NTS
DE APPR.		
DATE	10.03.16	

COPYRIGHT © 2010 BY DART AEROSPACE LTD
THIS DOCUMENT IS PRIVATE AND CONFIDENTIAL AND IS SUPPLIED ON THE EXPRESS CONDITION THAT IT IS NOT TO BE USED FOR ANY PURPOSE OR COPIED OR COMMUNICATED TO ANY OTHER PERSON WITHOUT WRITTEN PERMISSION FROM DART AEROSPACE LTD

Dart Aerospace Ltd

W/O:		WORK ORDER CHANGES					
DATE	STEP	PROCEDURE CHANGE	By	Date	Qty	Approval Chief Eng / Prod Mgr	Approval QC Inspector

Part No: _____ **PAR #:** _____ **Fault Category:** _____ **NCR:** Yes - No **DQA:** _____ **Date:** _____

Resolution: _____ **Disposition:** _____ **QA: N/C Closed:** _____ **Date:** _____

NCR:		WORK ORDER NON-CONFORMANCE (NCR)						
DATE	STEP	Description of NC Section A	Corrective Action Section B			Verification Section C	Approval Chief Eng	Approval QC Inspector
			Initial Chief Eng	Action Description Chief Eng	Sign & Date			

NOTE: Date & initial all entries

H:\FORMS\Quality Assurance\approved QA\NCRWO RevE